Presence Switch - Professional Line

IR 180 UNIVERSAL

white
EAN 4007841 033149
Article number 033149
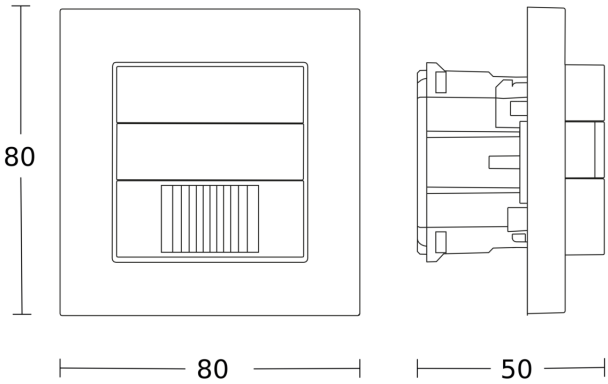
Dimension Drawing